FLEXPATIO

Manuals & Installation Guides

Motorized Louvered Aluminum Pergola Kit

SIZE: 10' x 10'

Email: support@flexpatio.com

Phone: +1 213-456-9168

Website: www.flexpatio.com

4 inch post

Table of Contents

Table of Contents..... 2

Safety Information..... 3

Pre-installation..... 4

Tools Required..... 4

Recommended Tools..... 4

Included Parts.....5-8

Installation Instructions..... 9-25

Warm Tips..... 26

Remote Control Coding Instructions..... 27-28

Operating Instructions For Leakage Protectors..... 29

Item Maintenance & Precautions..... 30

Help Center..... 31

Safety Information

Installation qualification requirements

- Must be installed in collaboration with 3-4 or more healthy adults
- Expertise in frame construction and strict adherence to specifications required (local contractor recommended)
- Prohibition of one-person installation work (to prevent the risk of falling)

Pre-installation inspection

- Verify that all parts are intact（Contact support@flexpatio.com for missing or damaged parts）
- Verify tool availability (specialized tools such as power drills)
- Verify local building code requirements (including structural/drainage/ electrical standards)

Personal protection standard

- Eye protection: anti-impact goggles (anti-aluminum chip splash)
- Hand protection: industrial-grade cut-resistant gloves (thickness ≥ 2mm)
- Respiratory protection: N95 mask

Site safety management

- Establishment of a 2-meter safety separation zone (no children/pets allowed)
- Parts management system implemented (immediate cleaning of floor screws)
- Column bases fully tightened (eliminate tripping risks)

Power tool operation

- Ensure safe and regulated use of power tools
- Monitor tool temperature to avoid overheating (continuous use ≤ 15 minutes)
- Wear insulated gloves

Pergola structural assembly requirements

- Prohibit any structural modifications (maintain original design)
- Double verification of connection tightness (torque values according to manual)
- Link the wires according to the specification of the manual

Extreme weather conditions

- Ice and snow: shutter operation prohibited (locked when temperature ≤ 0°C)
- Strong wind environment: Do not use if the maximum wind limit is exceeded
- Storm conditions: exceeding the maximum drainage slope is a cautionary use

Special risk avoidance

Louvers operation ban:

- Prohibition of hand intervention in the mechanical gap (keep a safety distance of 15 cm)
- Prohibition of roof loads exceeding the maximum load

Pre-installation

PLANNING INSTALLATION

To prevent damage, place all parts on a soft surface during assembly.
Tools required for assembly (not included): Allen wrench (included), hammer, screwdriver, stepladder, level and other safety items such as gloves, safety goggles and hardhat.

NOTE | Tools and protective articles below are not provided.

TOOLS REQUIRED

Safety goggles

Gloves

Hardhat

Level

8-Foot Ladder
(Must have 2 ladders.)

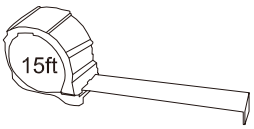

15-Foot
Tape measure

4 People

RECOMMENDED TOOLS

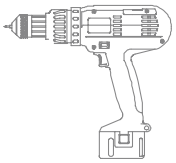

Cordless drill or drive
with 4mm Allen head bit

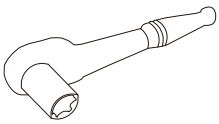

Socket wrench with
10mm and 14mm socket

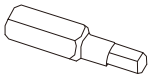

3mm / 4mm /5mm/6mm
Allen or Hex bit

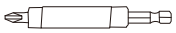

Driver bit extension
(4-inch recommended)

Included Parts

PART	QTY	DIAGRAM
Post A1	3	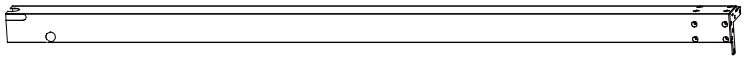
Post A2	1	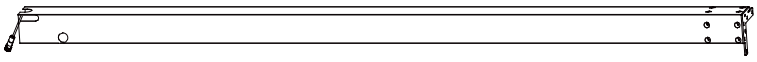
Beam B	2	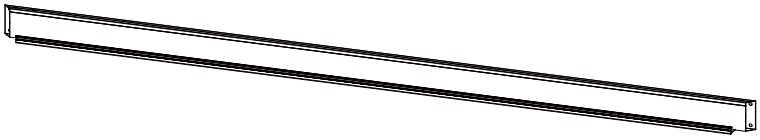
Beam C1	1	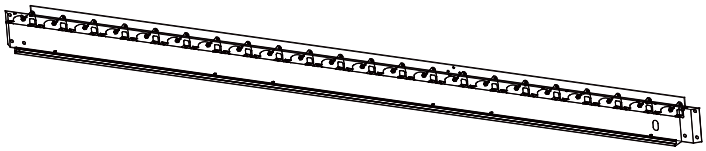
Beam C2	1	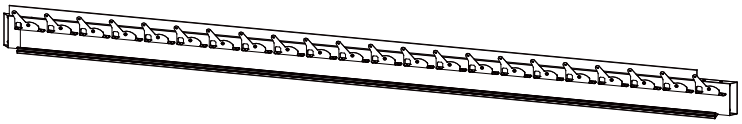
Base Plate D	4	
Cover E	4	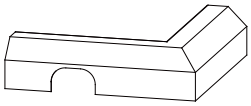
Cover F	4	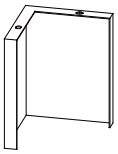
Louvers G	22	
Motor Cover H	1	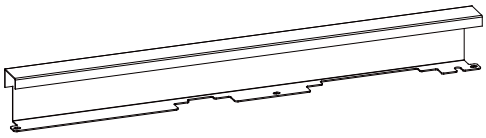

Included Parts

PART	QTY	DIAGRAM
Motor Assembly I	1	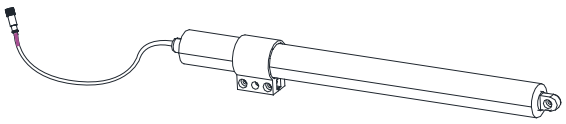
Connector I1	1	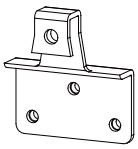
Motor Bracket I2	1	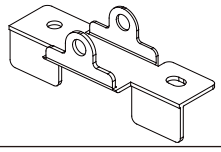
Controller J	1	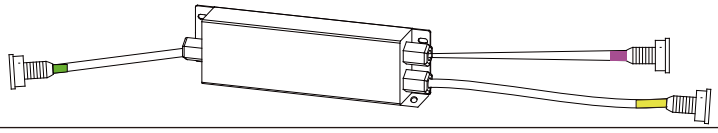
Bracket K	4	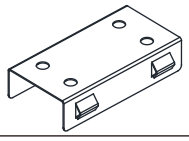
Wire L	1	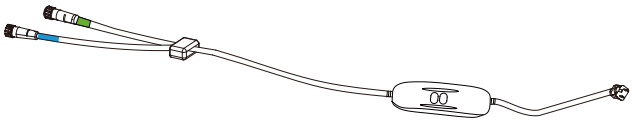
Wire L1	1	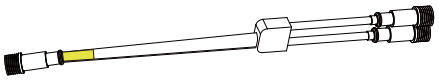
Remote Control Basel M	1	
Controller O	1	
Wire Slots Q1	2	
Wire Slots Cover Q2	2	

Included Parts

PART	QTY	DIAGRAM
Bolt AA	21	M6 x 15mm
Bolt BB	32	M8 x 20mm
Bolt CC	16	M6 x 20mm
Bolt DD	88	M5 x 8mm
Bolt EE	3	M6 x 18mm
Bolt FF	8	M5 x 15mm
Bolt GG	2	M6 x 15mm
M6 Washer HH	29	
Nut II	3	M6
Stake JJ	12	M8 x 100mm
Spacer KK	8	

Included Parts

PART	QTY	DIAGRAM
Allen Wrench LL	1	5#
Allen Wrench MM	1	4#
Allen Wrench NN	1	3#
Allen Wrench OO	1	4#
Wrench PP	1	
Straps QQ	8	
Bolt RR	2	M3 x 15mm
Bolt SS	1	M5 x 25mm, Bushing, Steel Washer, Nut
Bolt TT	1	M8 x 52mm
Bolt UU	1	
Bolt VV	6	M4 x 15mm

Installation Instructions

1 Select the position

2D FOOTING MEASUREMENT(dimensions in ft)

Note: It is critically important you start with rectangle, solid and level footings, concrete pad or deck to attach your Pergola Room.

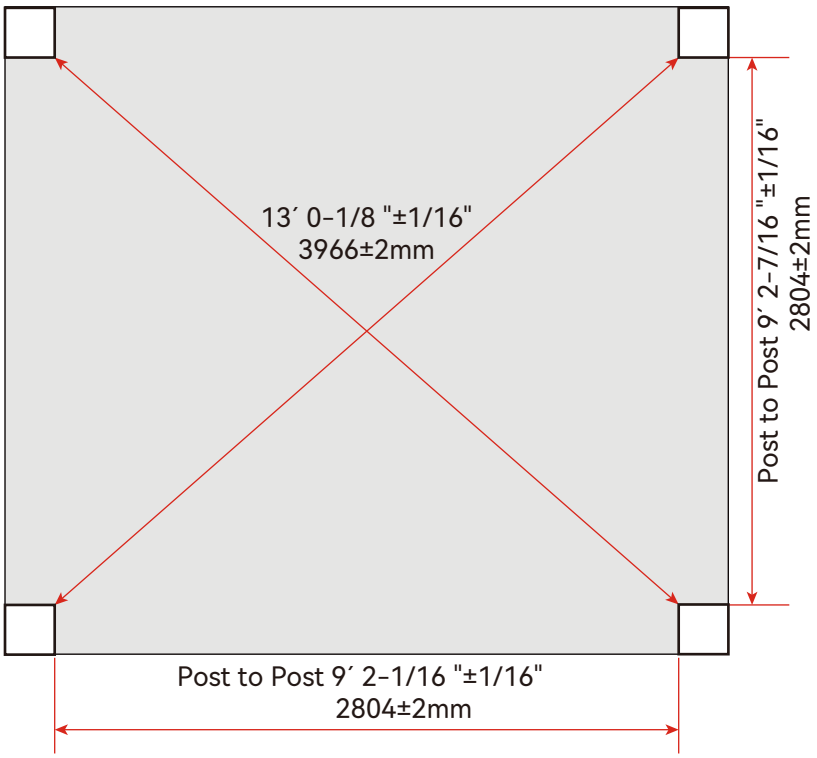

3D FOOTING MEASUREMENT(dimensions in ft)

Note: The foundation/ground for the pergola installation must be level.
If leveling is not possible, position the side with the C1 crossbeam on higher ground.

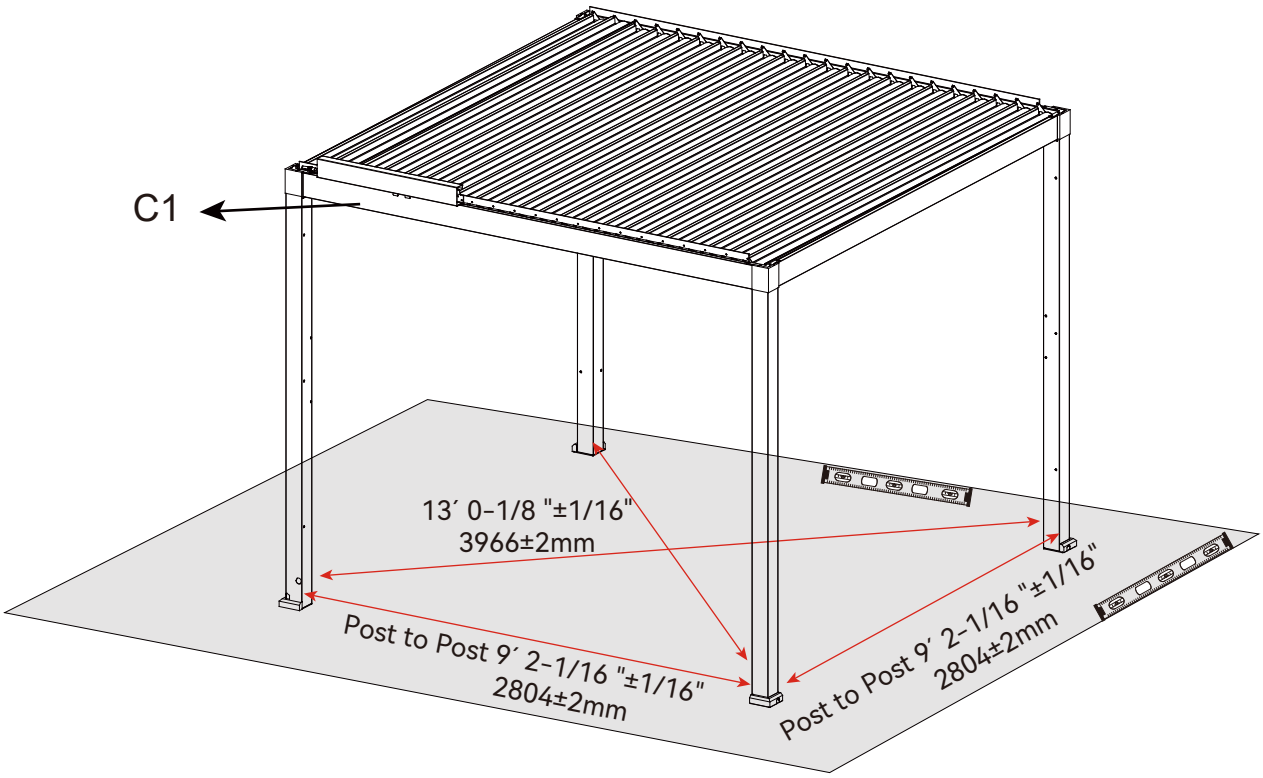

Installation Instructions

2 Installing the Post and Base Cover

CC	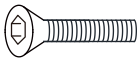	x16

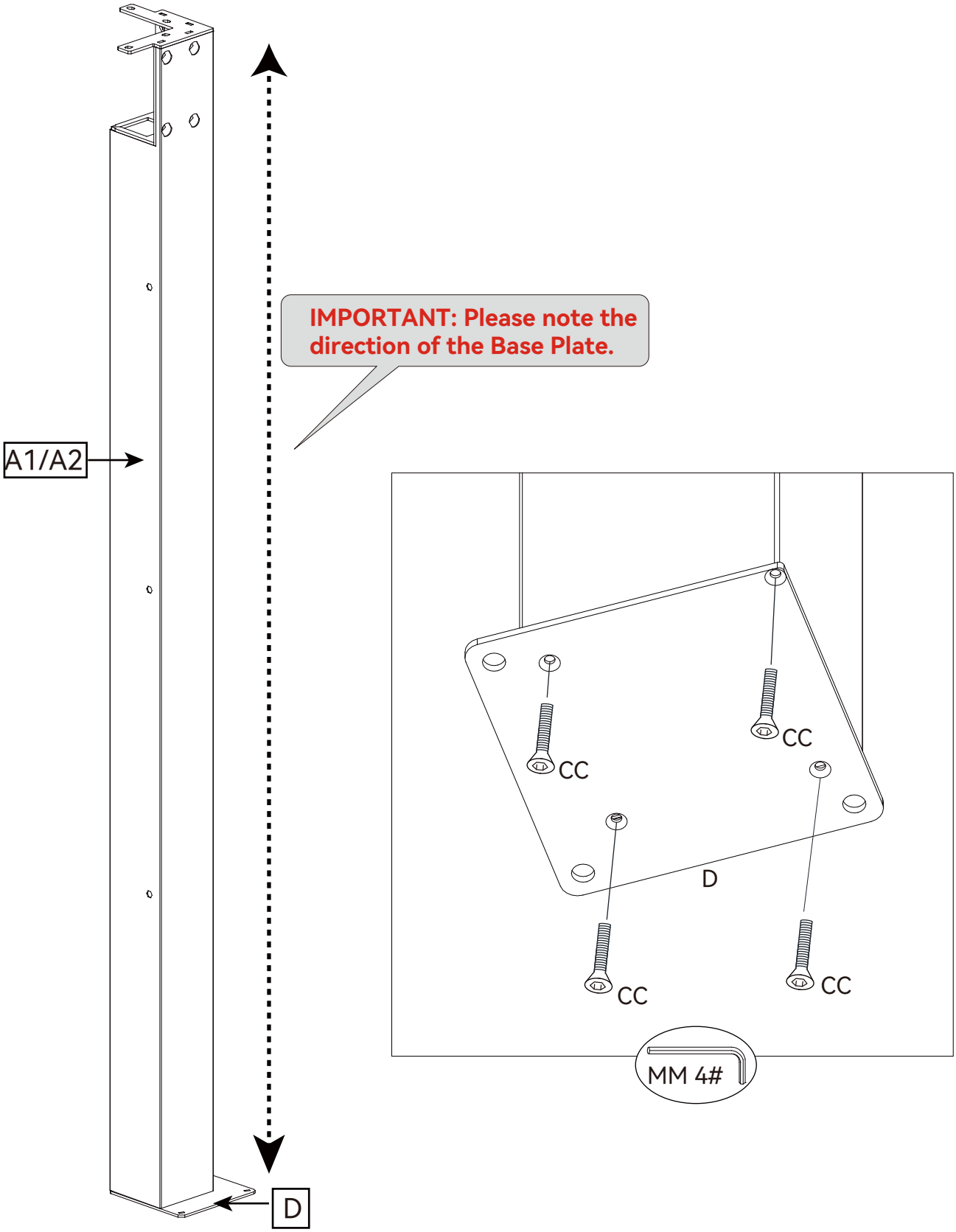

Installation Instructions

3 Installing the Motor Assembly

TT		x1
SS		x1

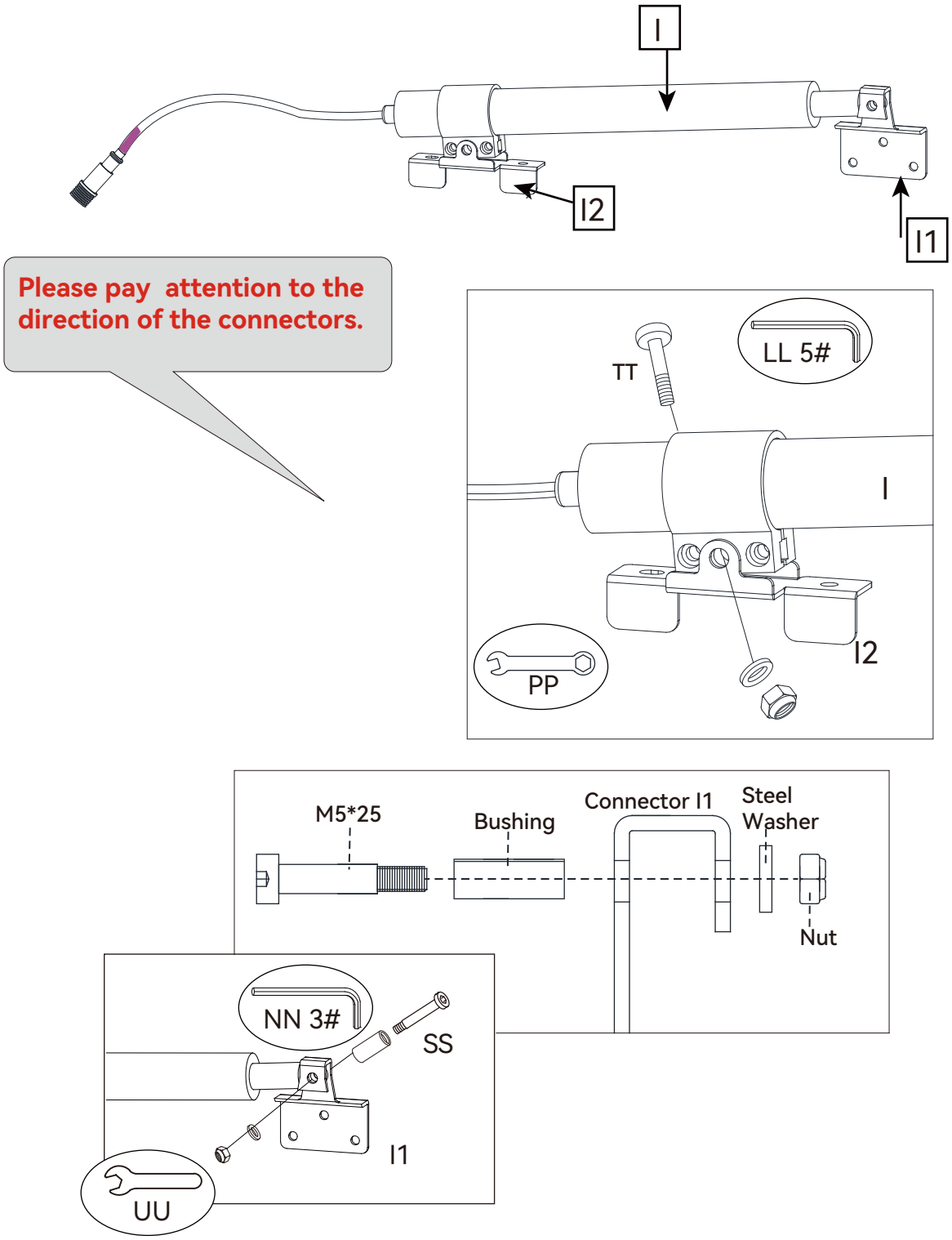

4 Installing the Motor Assembly and the Controller

GG		x2
AA		x5
EE		x2
HH		x10
II		x3

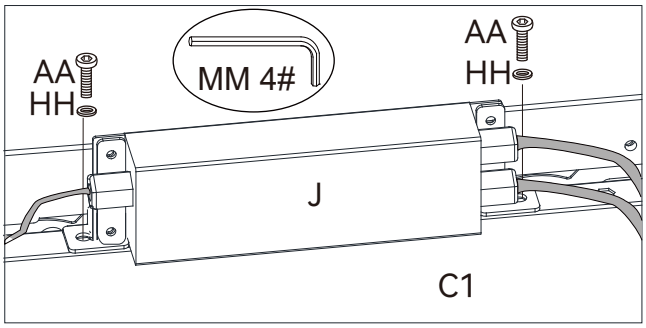

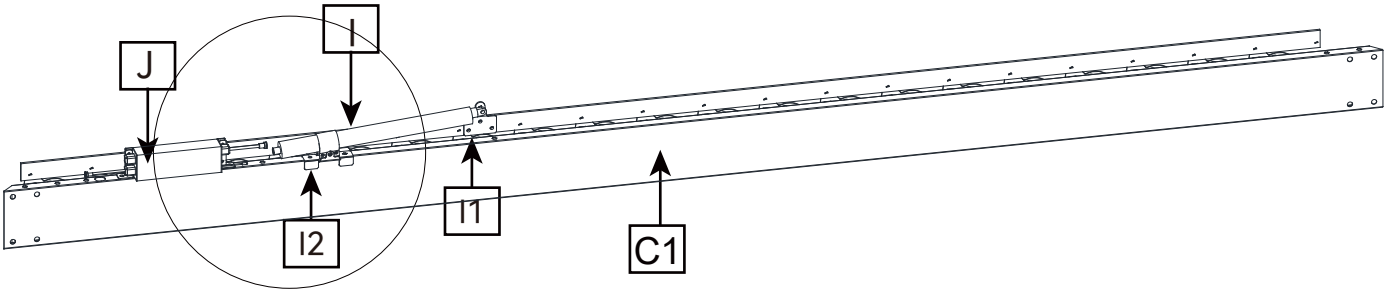

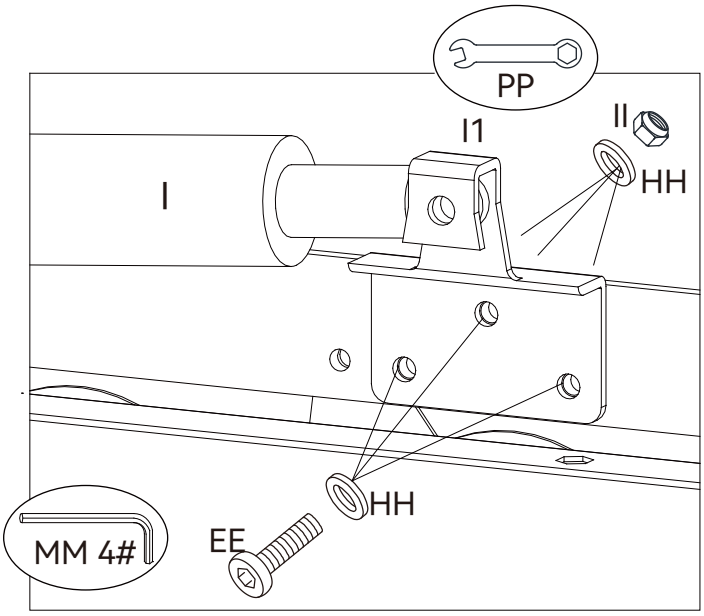

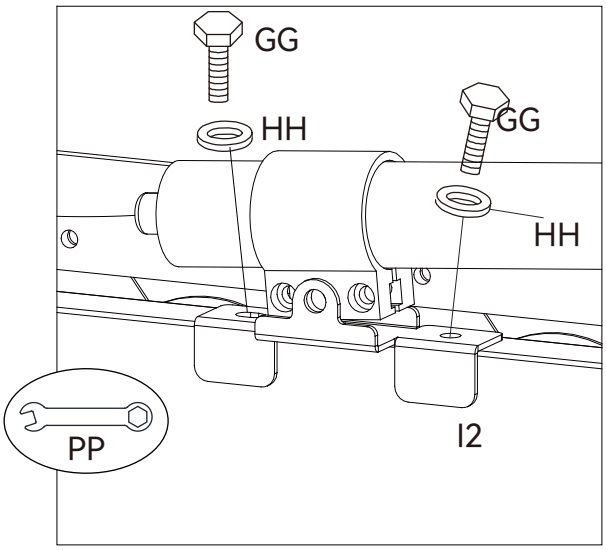

Installation Instructions

5 Installing the Beam

BB		x16

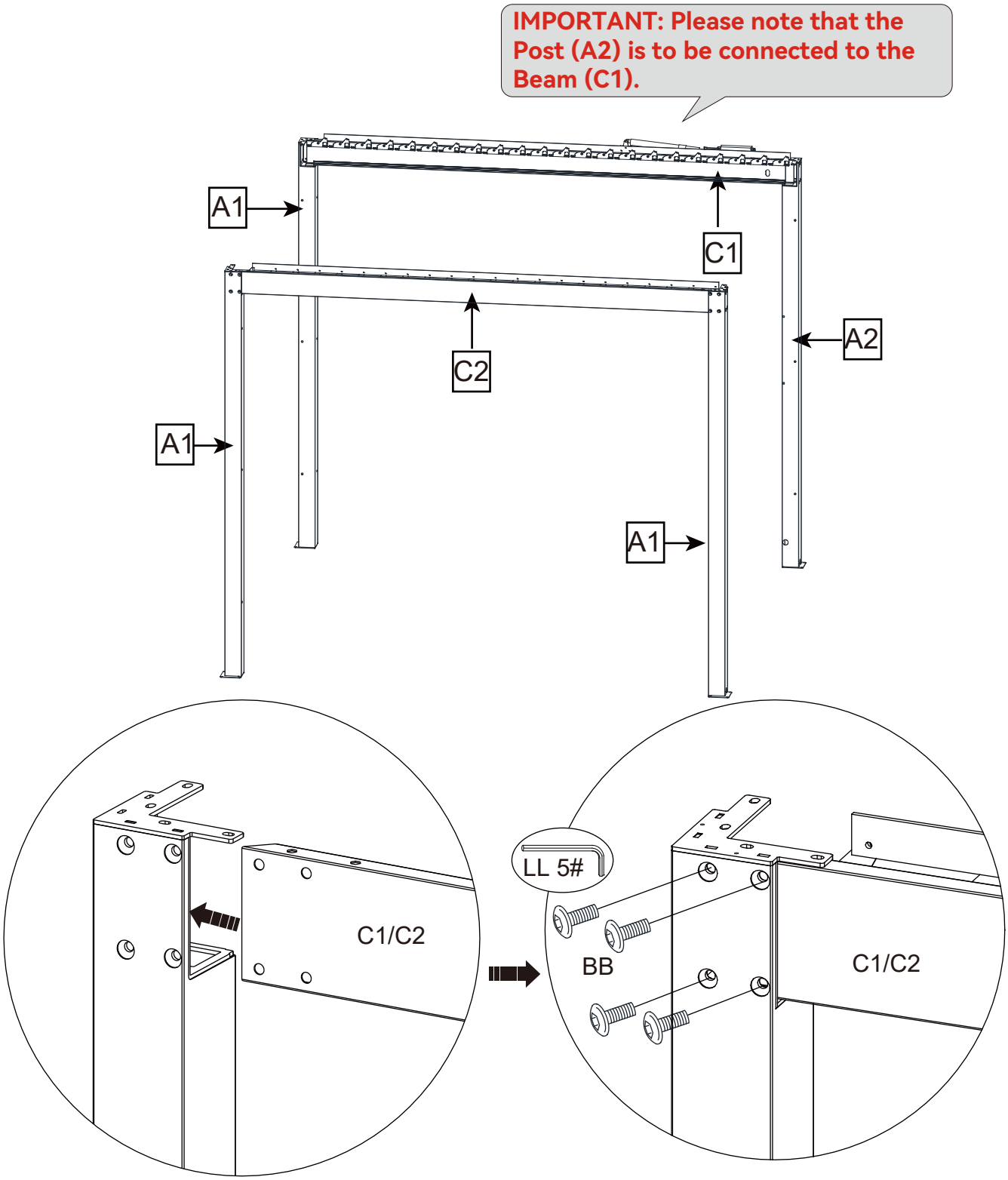

Installation Instructions

6 Installing the Beam

AA		x16
BB		x16
HH		x16
FF		x8

IMPORTANT: At least four people are required to hold the stand to avoid falls.

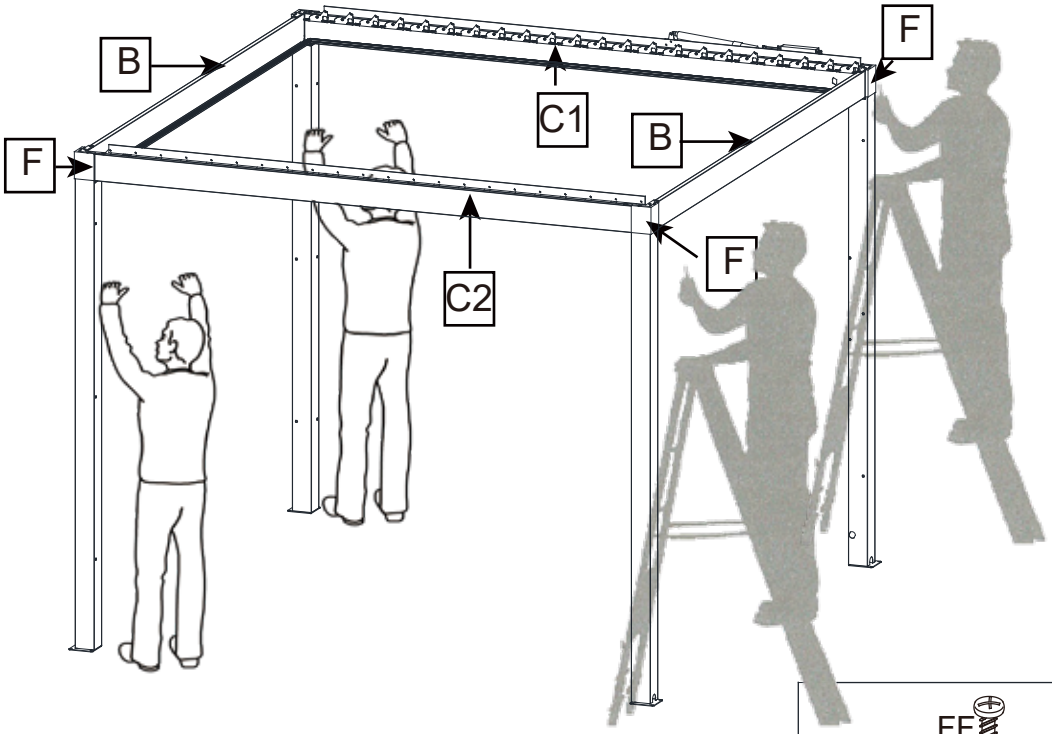

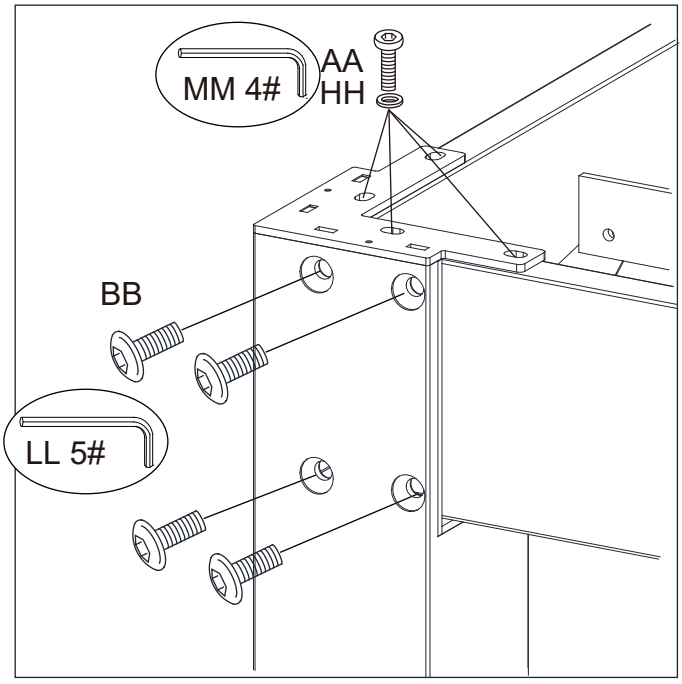

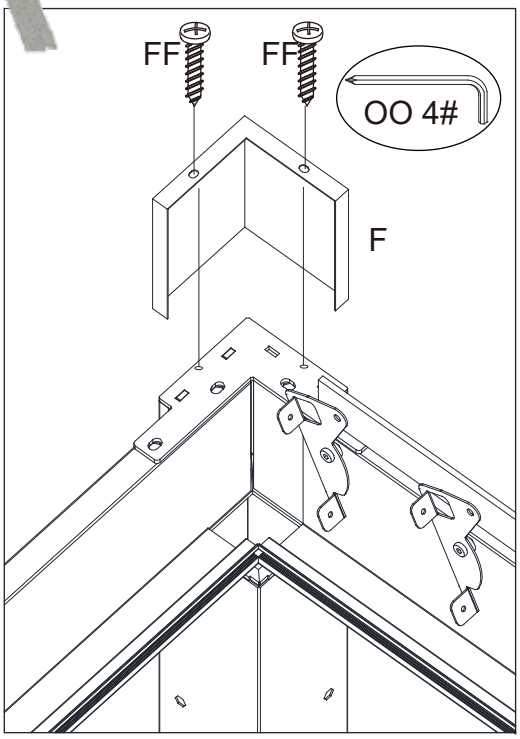

7 Measuring diagonal distances

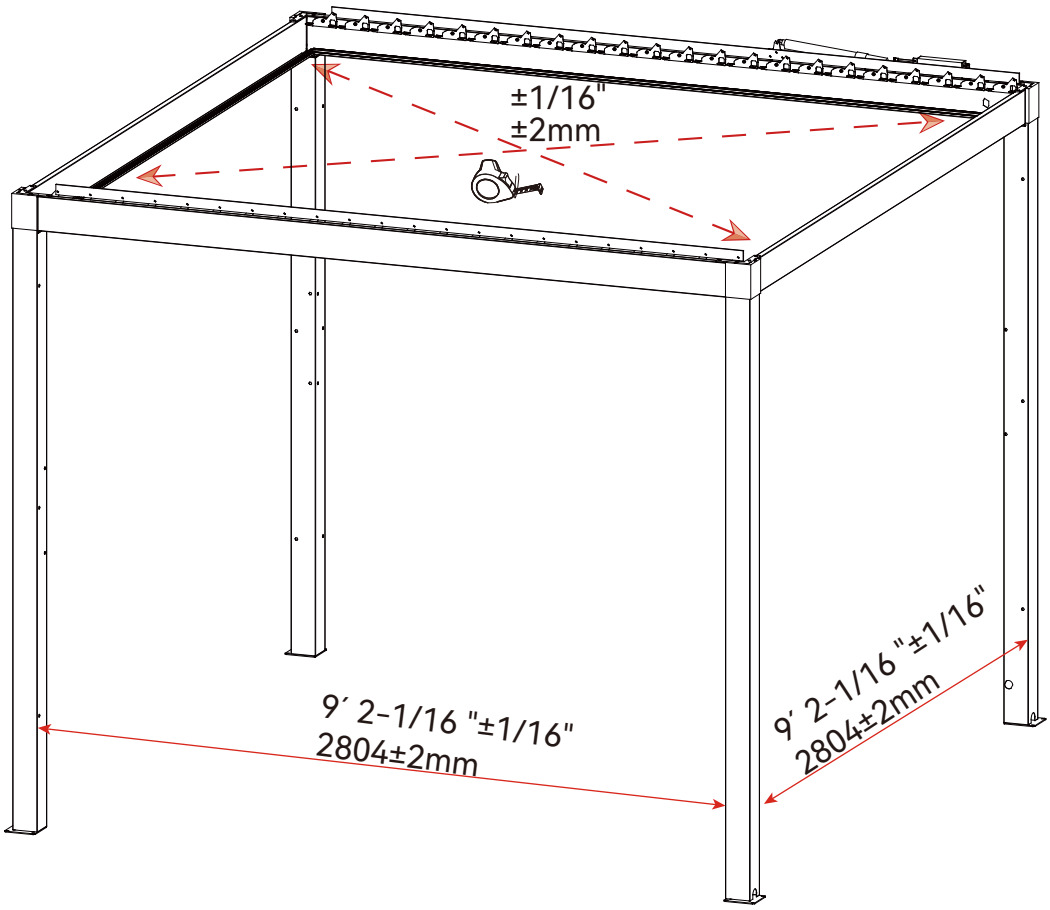

IMPORTANT: After this step of assembly is completed, measure the distance between the inside of the post and the diagonal distance with a tolerance of ±2mm.

Installation Instructions

8 Layout of line

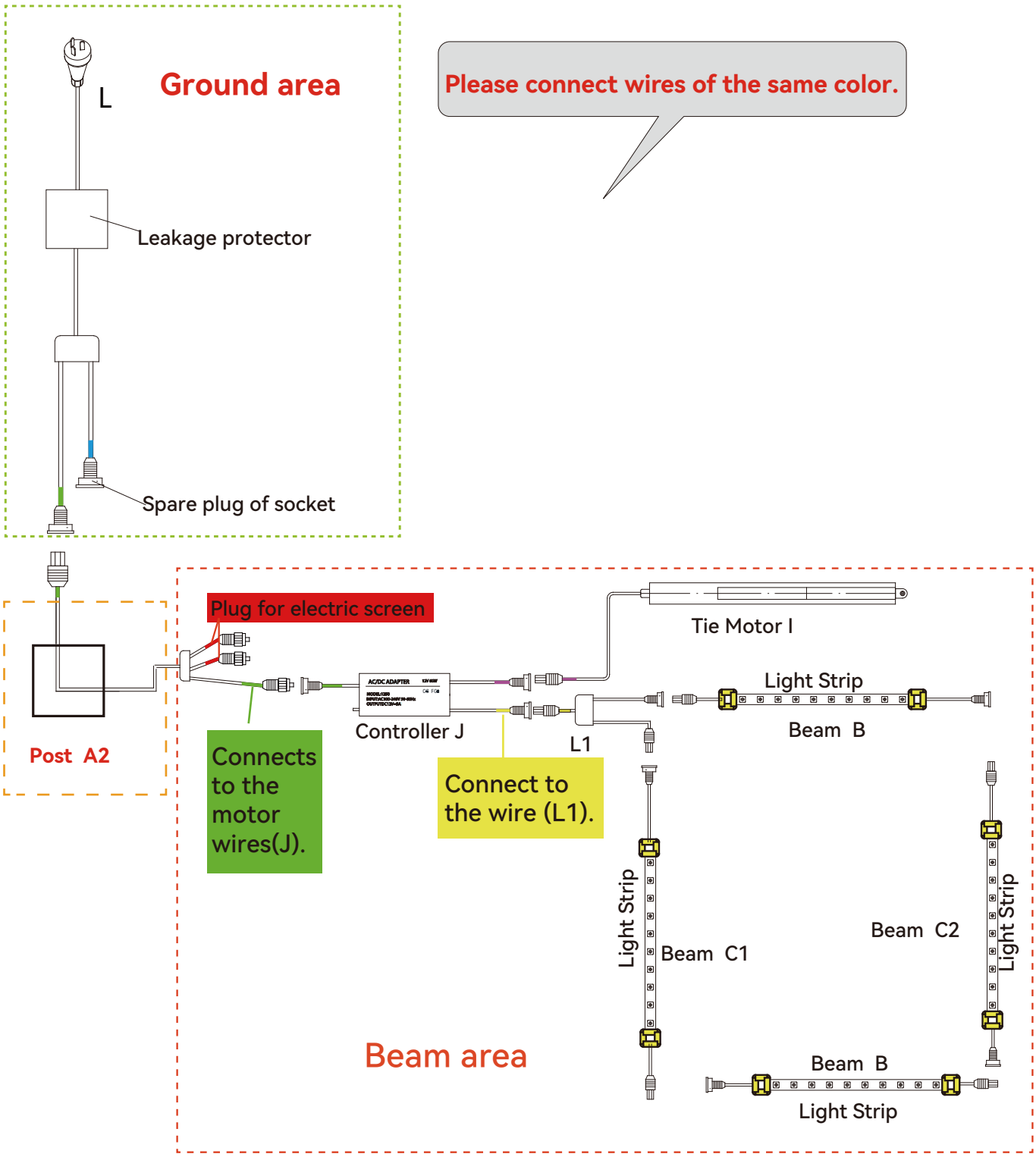

9 Layout of line

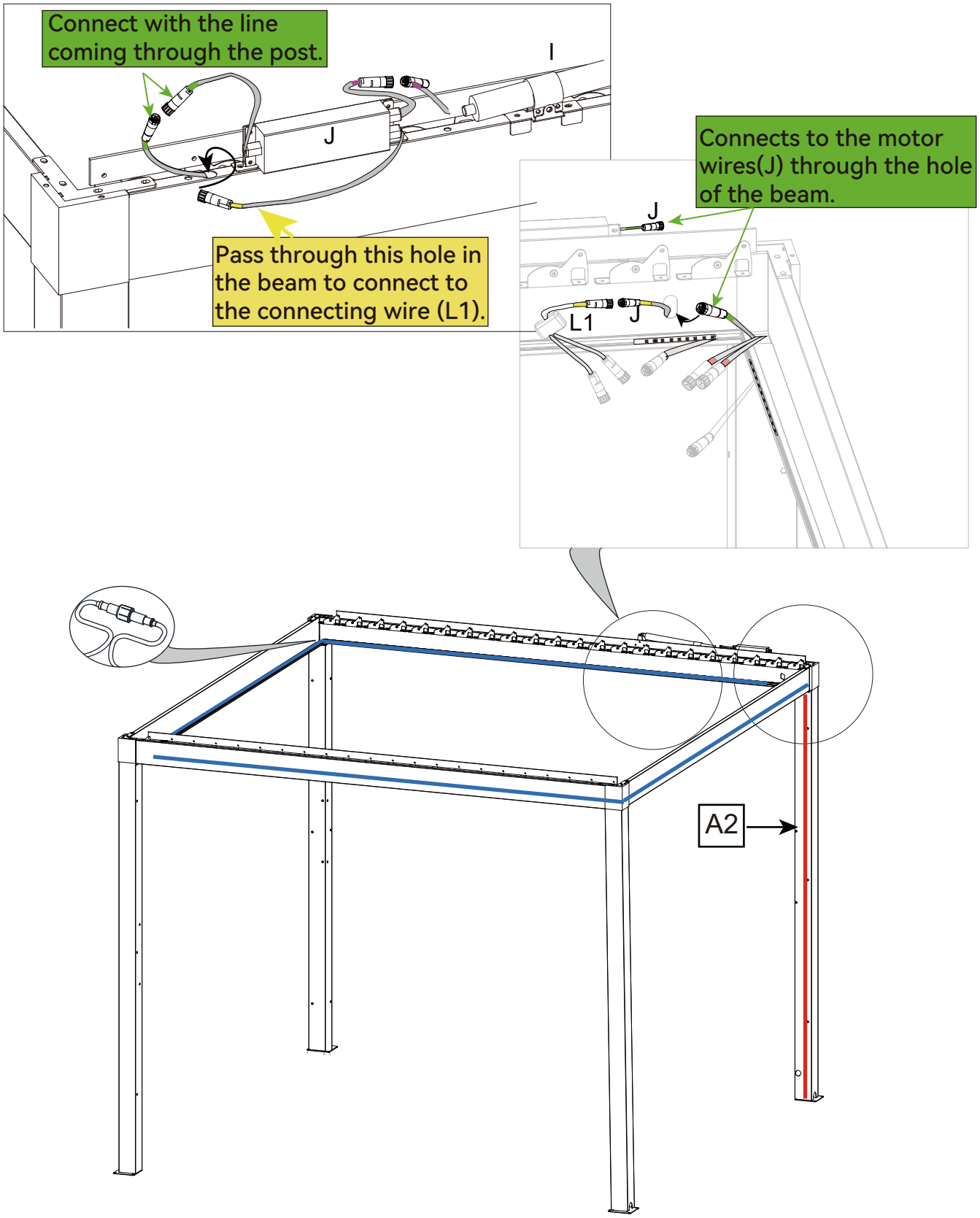

10 Layout of line

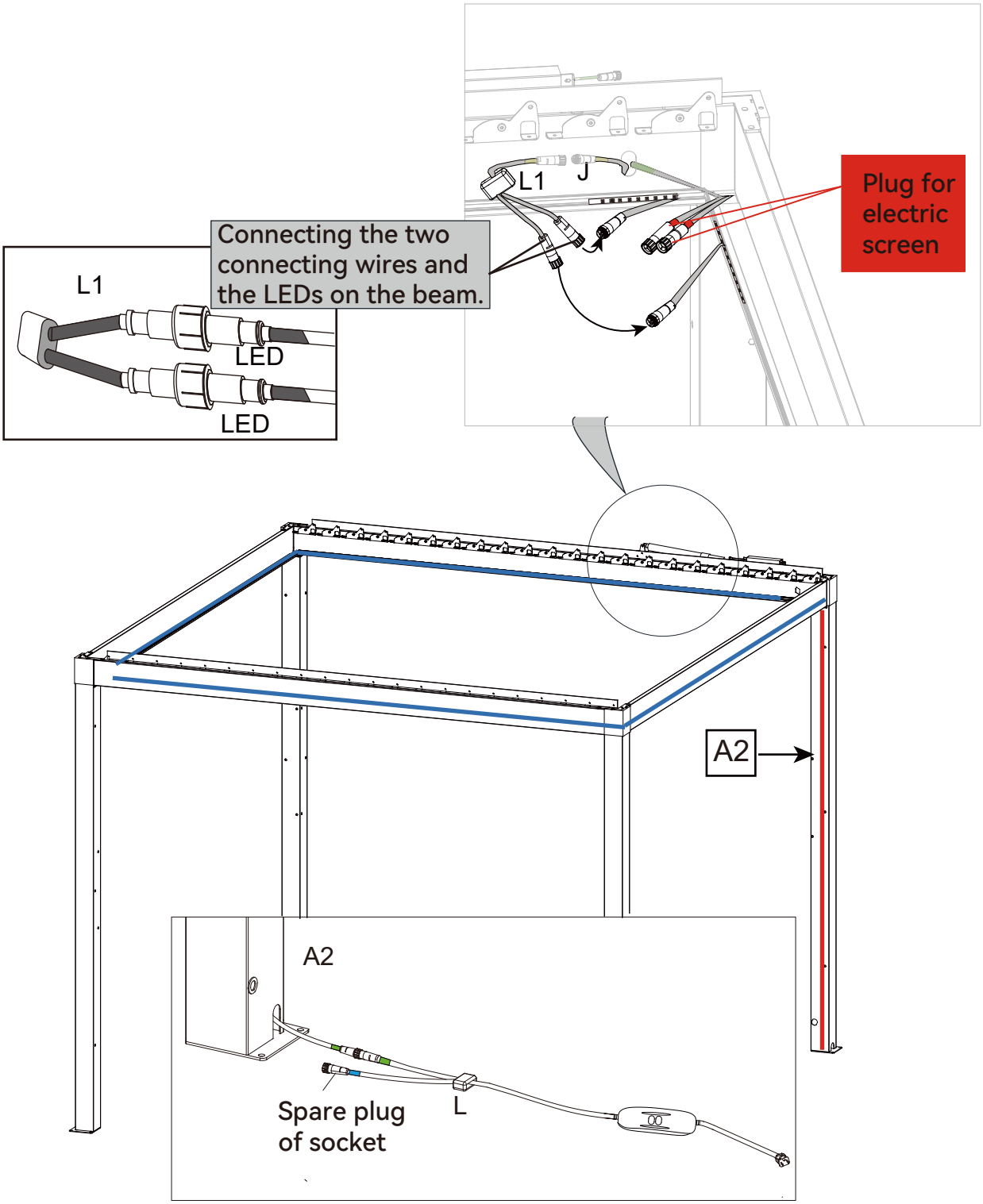

⓫ Installing the Bracket

Place the terminals on the four corners on the brackets (K) and tie them together using the straps (QQ), then put the bracket (K) into the sink of the cross beam (B/C1/C2).

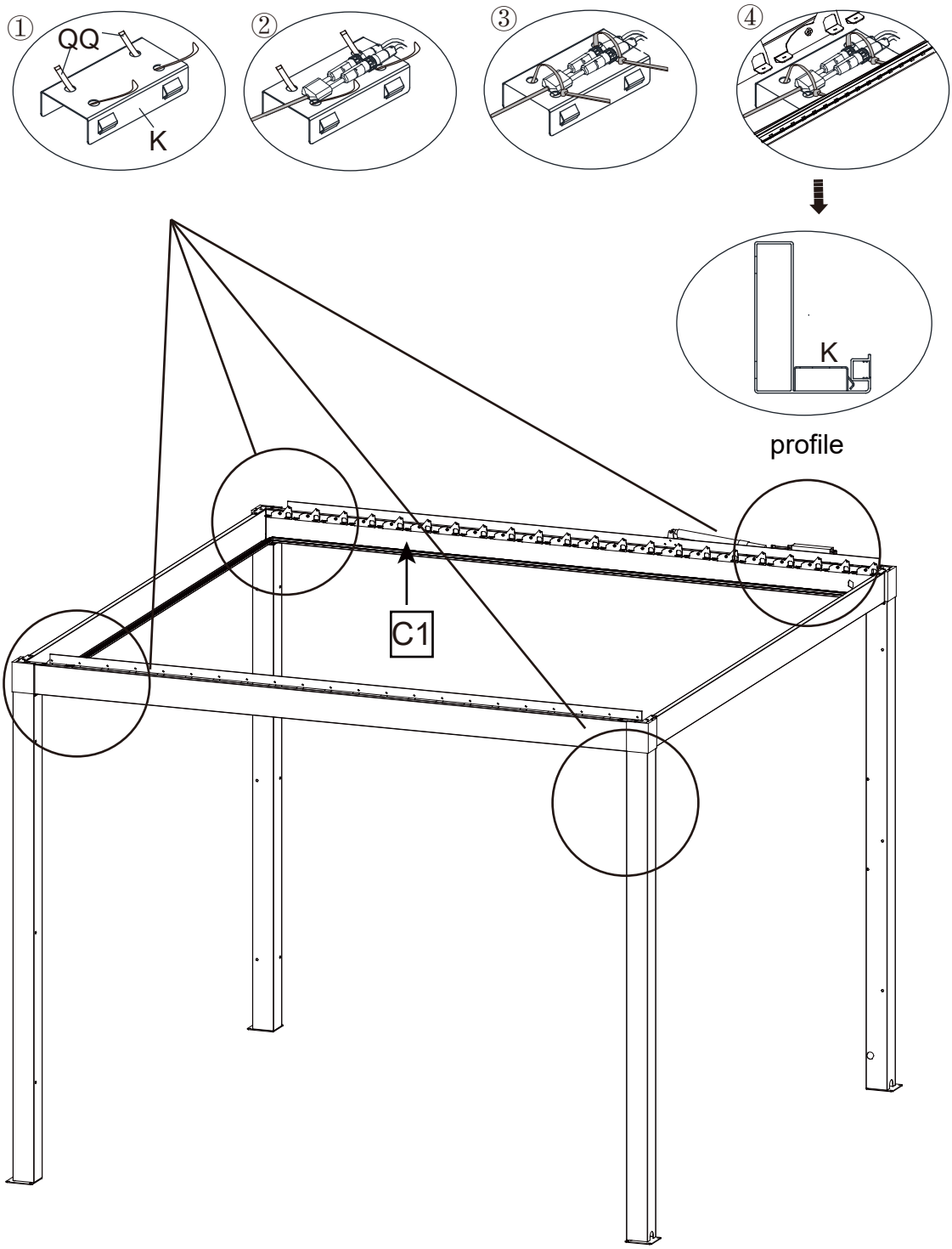

⓬ Installing the louvers

DD		x4

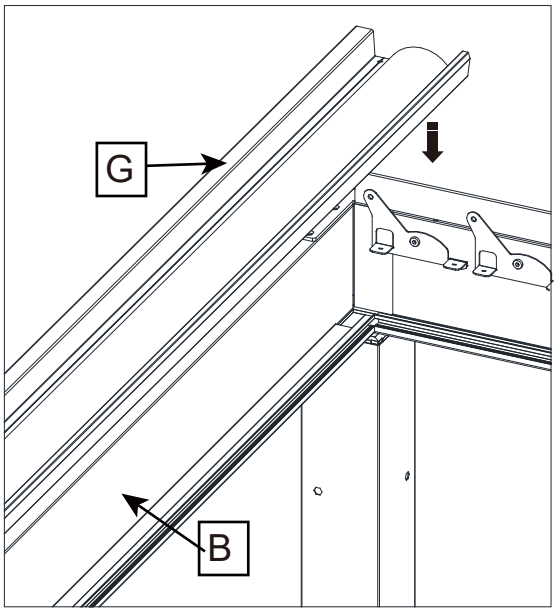

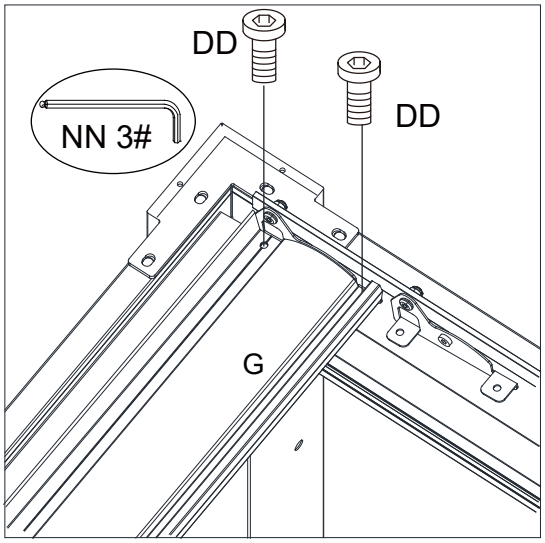

Tips: Align the holes for the two ends of the Louvers(G) first, then tighten the Bolts (DD) by using a wrench.

Tips: Please pay special attention that the Louvers (G) must be assembled from theend with power and pay attention to the orientation of the louvers.

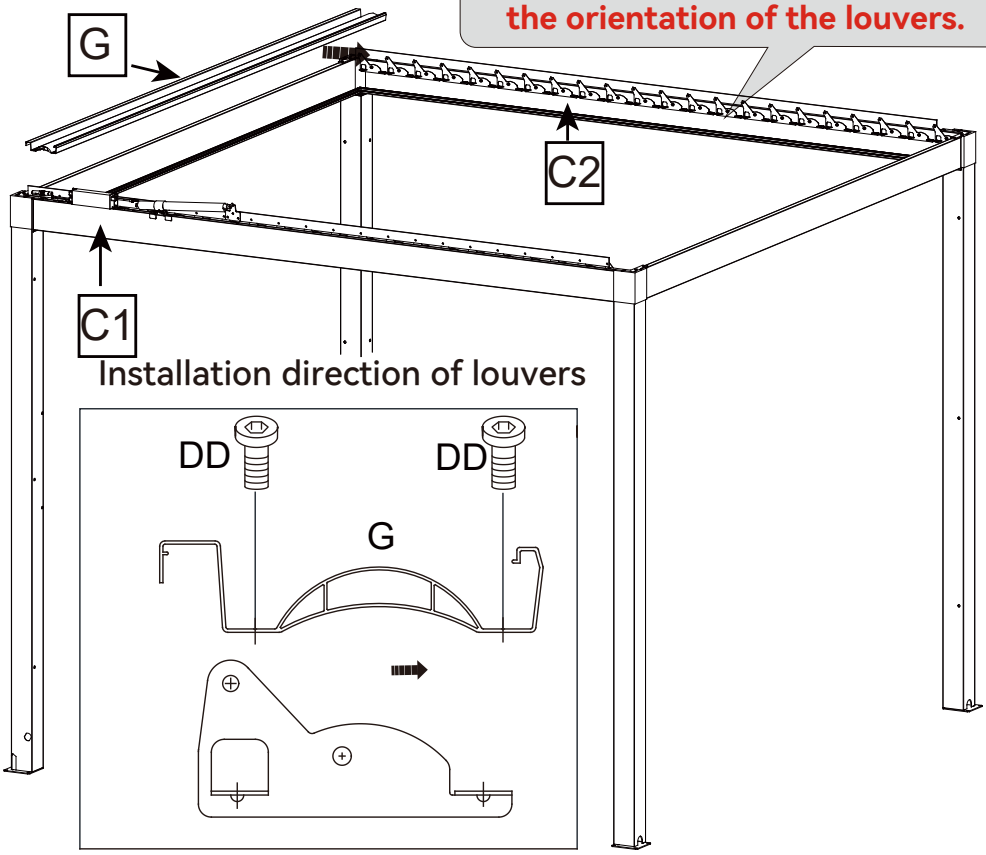

13 Installing the louvers

DD		x84

Installation direction of louvers

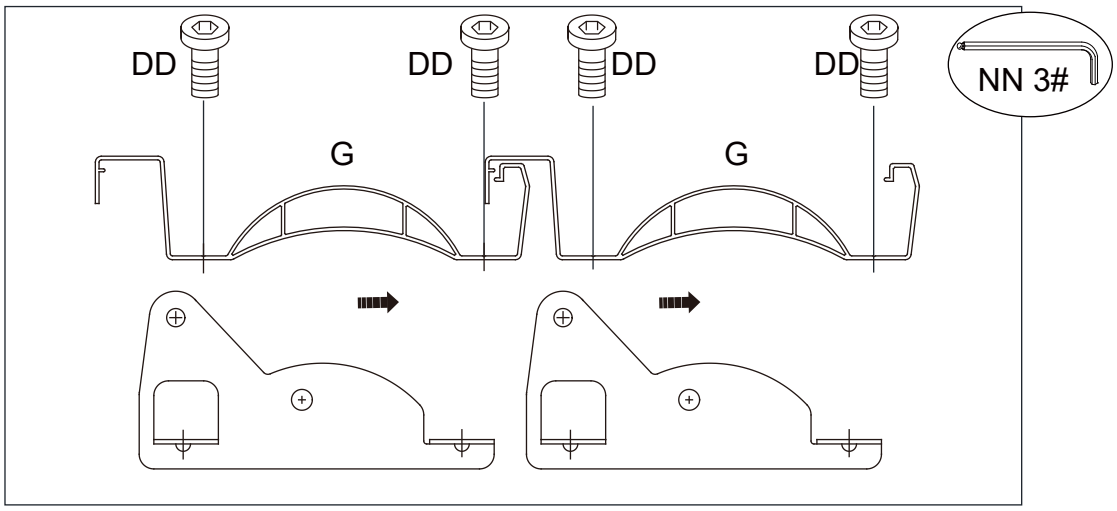

Tips: Align the holes for the two ends of the Louvers(G) first, then tighten the Bolts (DD) by using a power wrench.

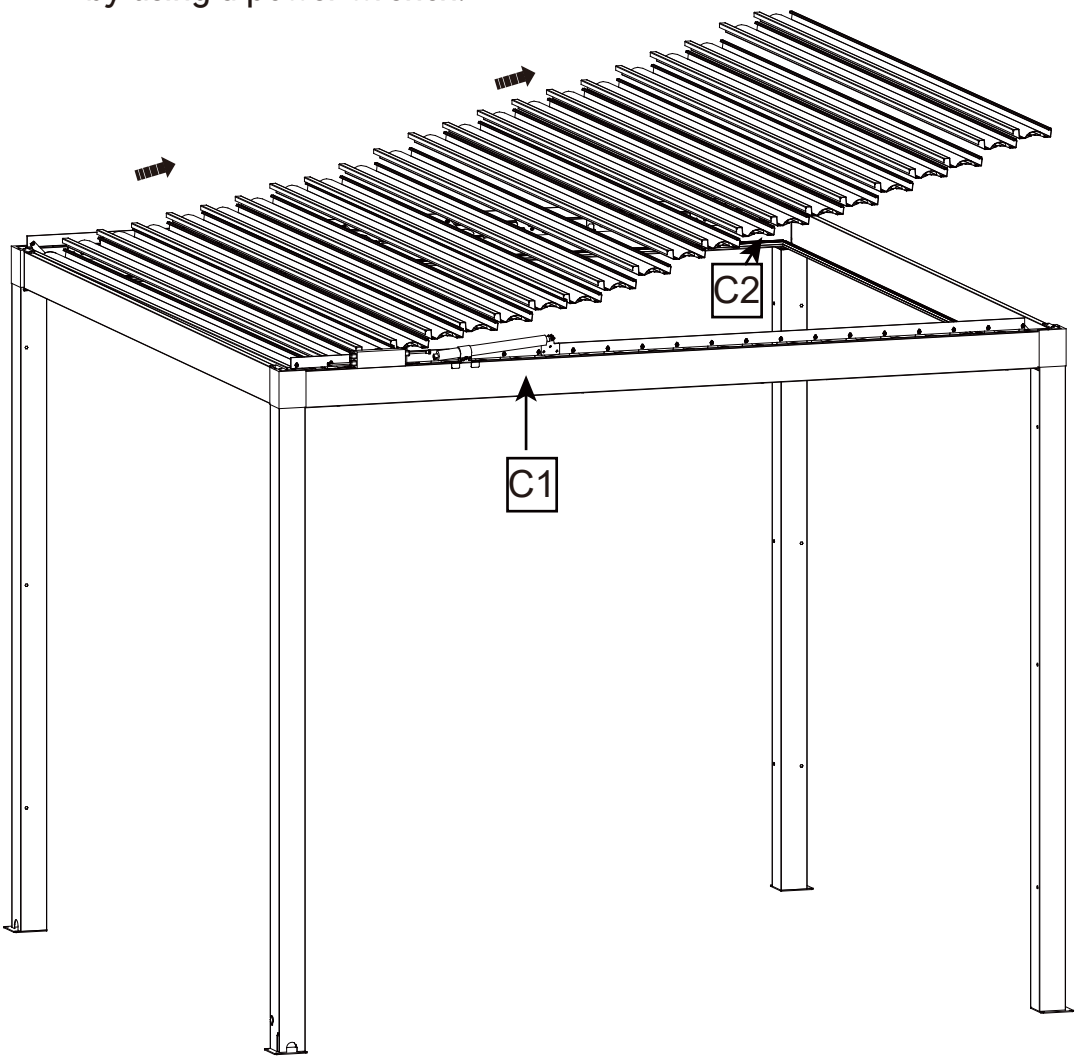

14 Installing the Motor Cover

AA		x3
HH		x3

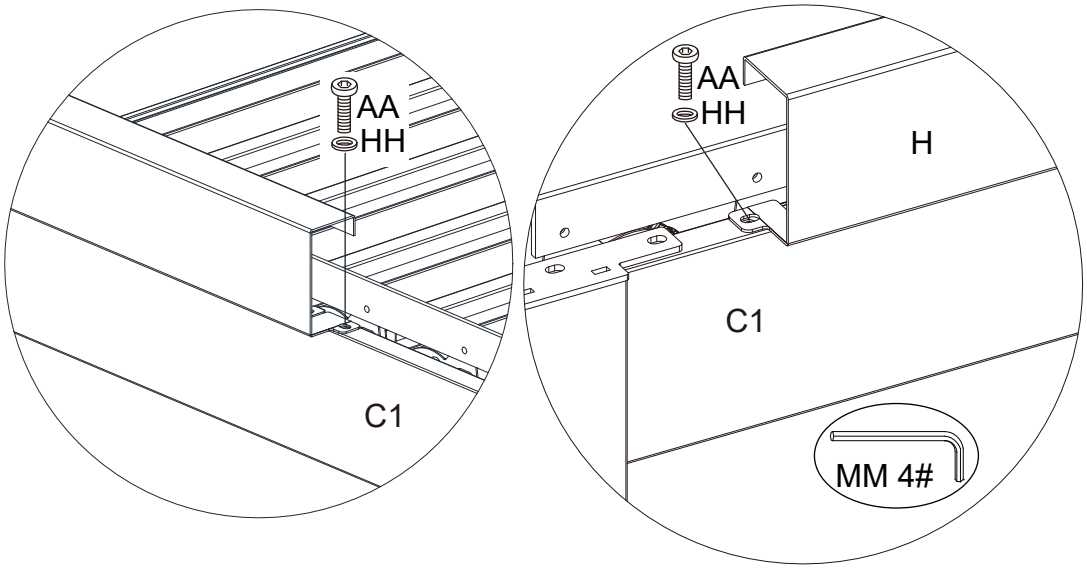

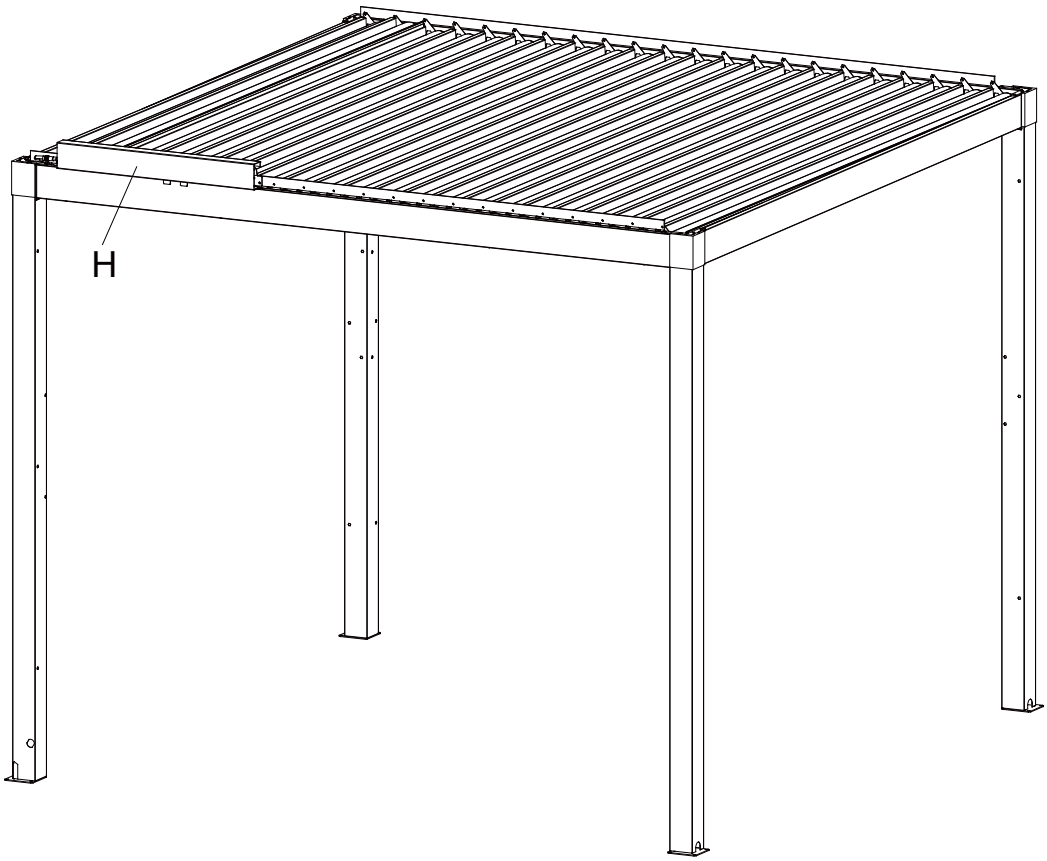

15 Installing the base cover

JJ		x12

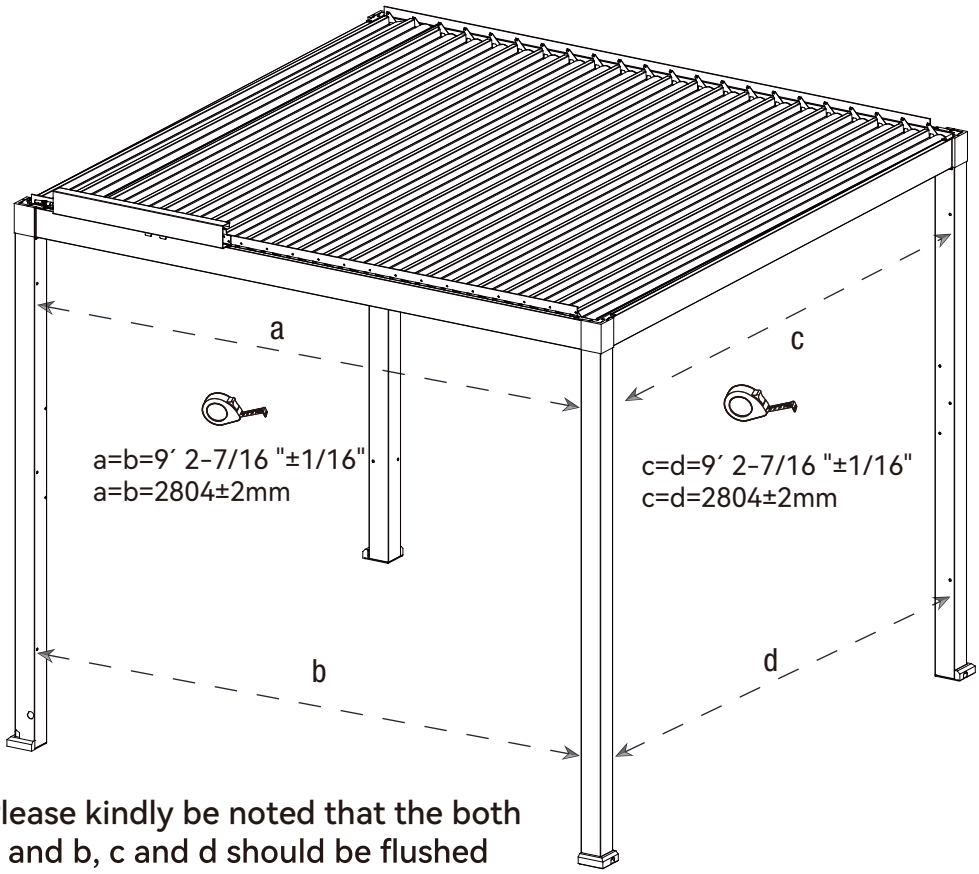

Please kindly be noted that the both a and b, c and d should be flushed and parallelled with each other after assembled, and the tolerance should be controlled within ±2mm.

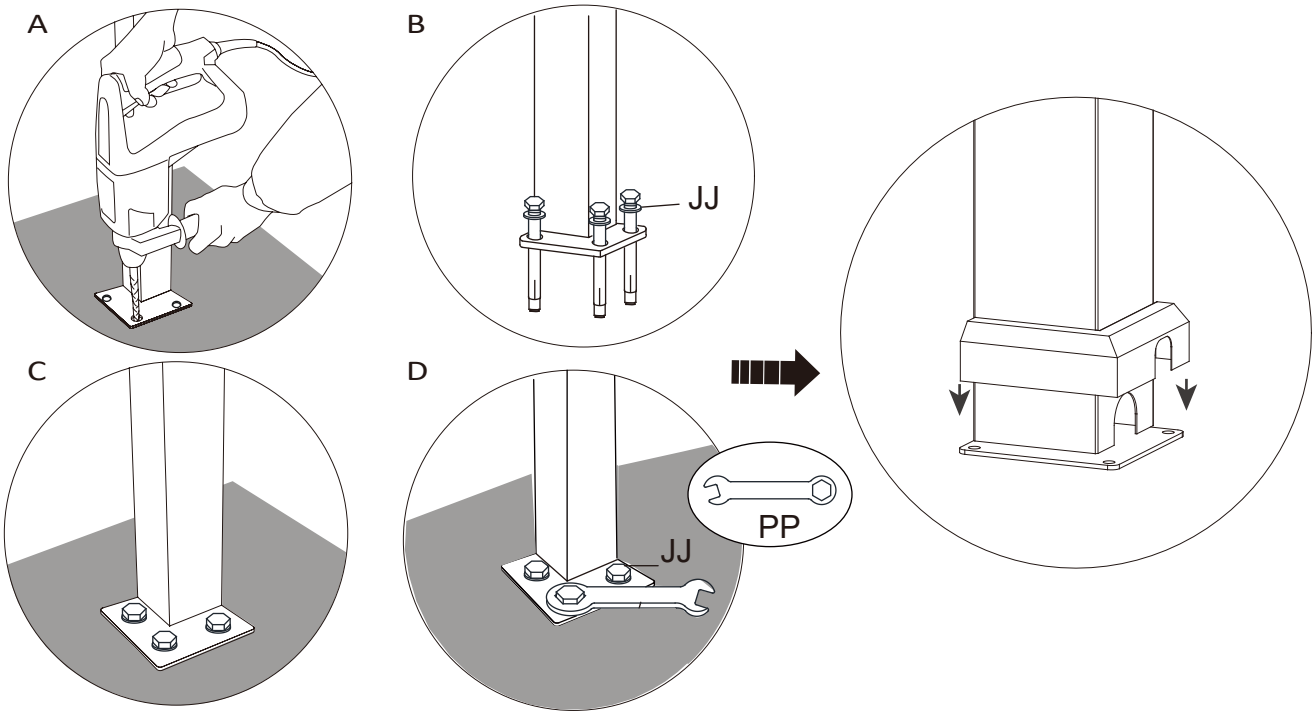

16 Installing the Remote Control

RR		x2

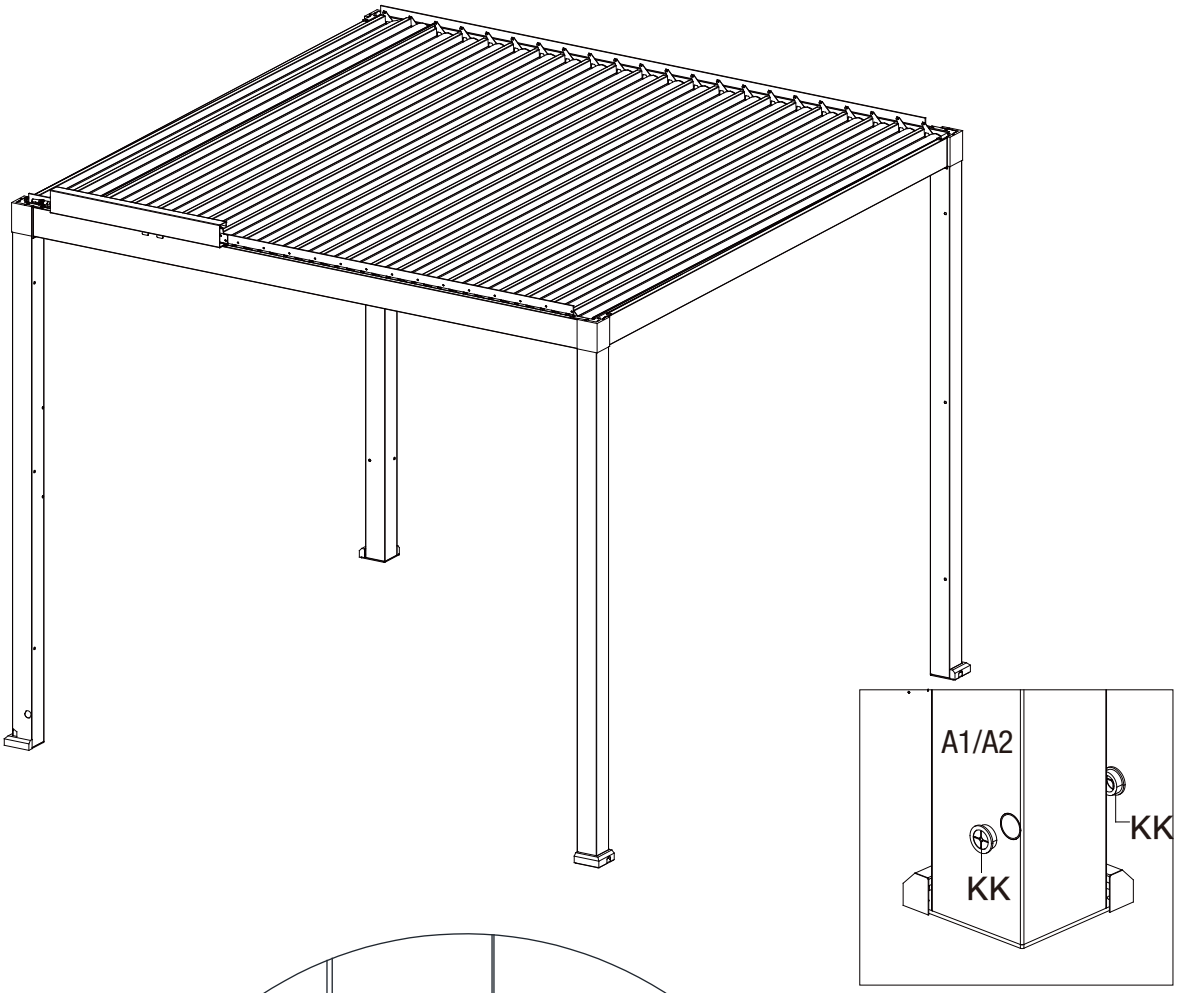

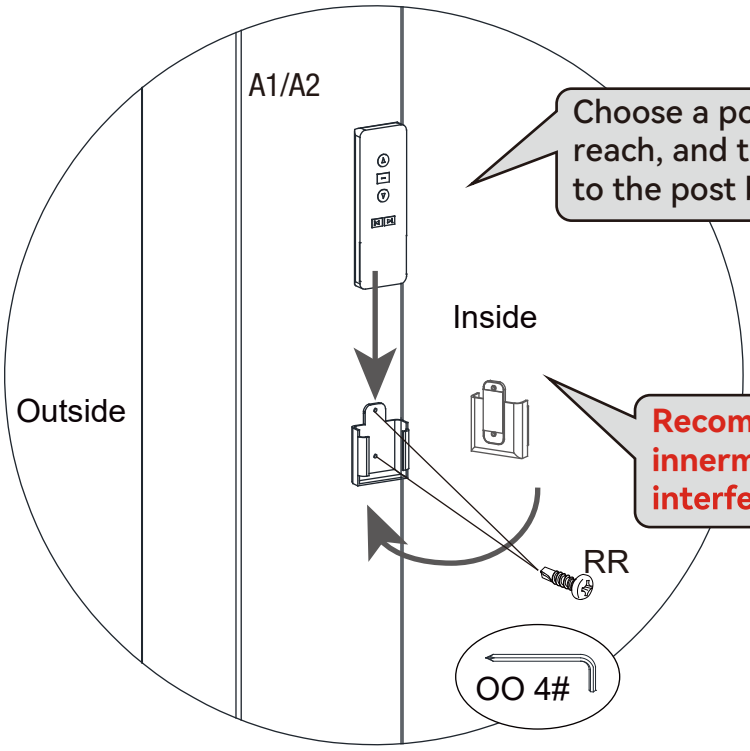

Choose a post and height that is easy to reach, and then install the remote control to the post by using bolts (RR) .

Recommended to be installed on the innermost side of the post to prevent interference with accessory installation.

⓱ Install the Pegboard and Cover

VV		x6

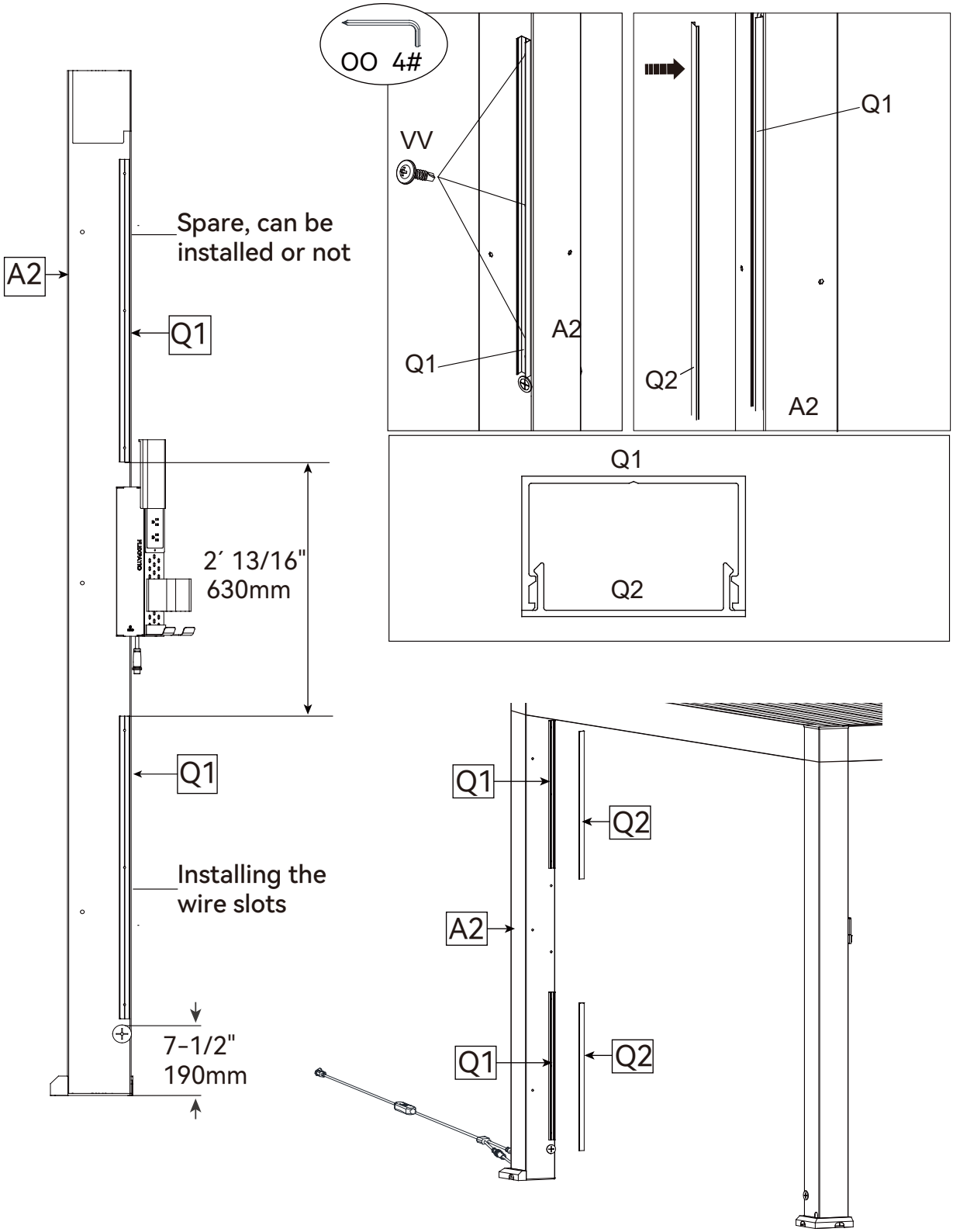

Warm Tips

Please close the louvers when it rains.
Note: After the rain, please open the louvers slowly to prevent the residual rain water from splashing.

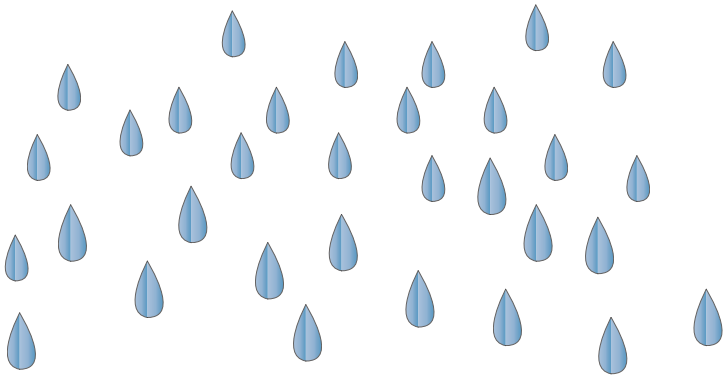

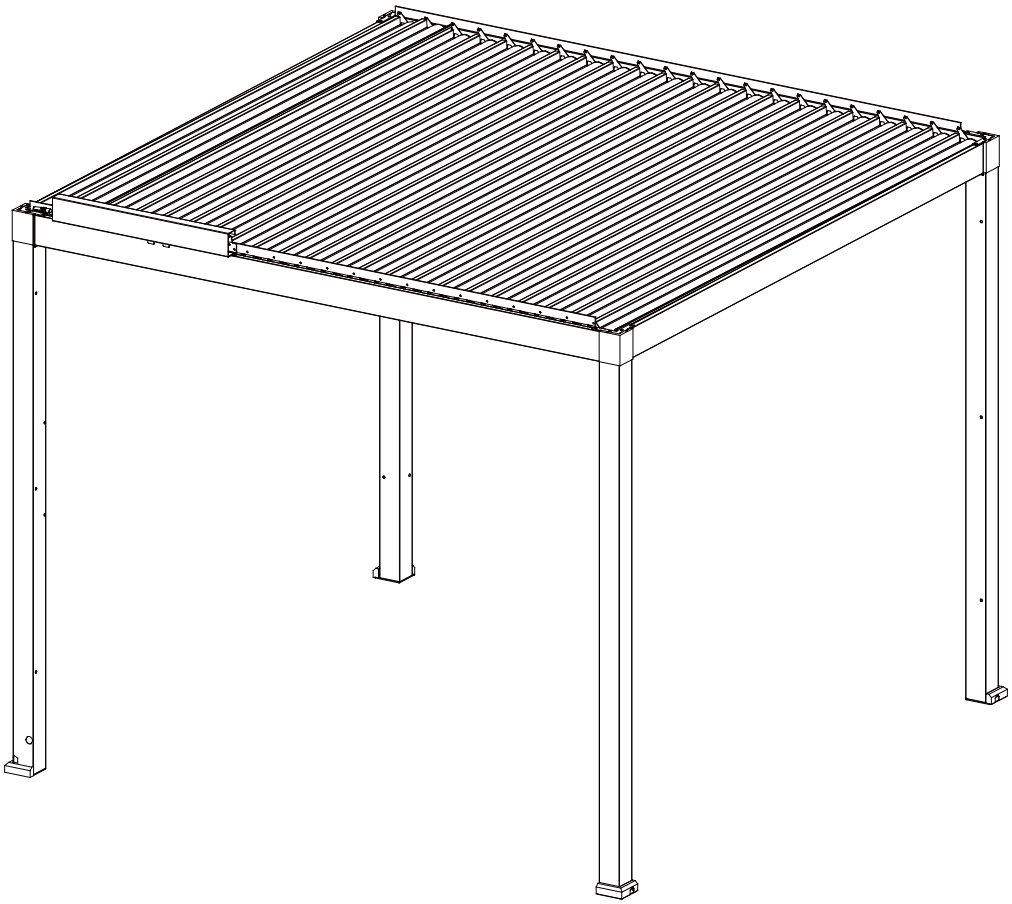

Remote Control Coding Instructions

Remote Control Operating Instructions

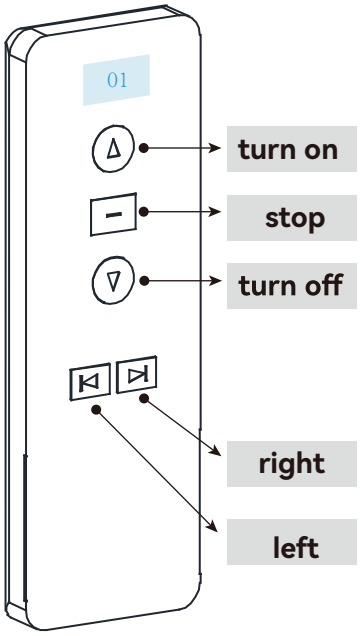

Channel Functions:

Channel 01: Controls the louvers.

Channel 02: Adjusts the LED light color and brightness.

Channel 03-08: Control Electric Screens 1–6 individually (up and down).

Channel 09: Reserved for other functions. It can be used to expand to additional powered accessories if needed.

Control of the Louver

Switch “ ⊲⊳ ” to channel “01” using the remote control. Long press“ △ ”aboout 3 seconds, the louver will open automatically, the“ ⊟ ” to pause their movement, and the“ ▽ ” to close the louvers.

Control of the LED

Switch “ ⊲⊳ ” to channel “02” using the remote control.
Tap“ △ ” to turn on, Tap“ ▽ ” to turn off.
Long press “ ⊟ ” about 6 seconds, the light color will change automatically.
Press “ ⊟ ” to select the color you want.
Press and hold “ △ ” , can adjust the brightness, it will get brighter and brighter, release the button when adjust to the appropriate brightness.
Press and hold “ ▽ ” , can adjust the brightness, it will getting darker and darker, release the button when adjust to the appropriate brightness.

Lock and unlock the channel

Lock the channel (Only for channel 6 and channel 16):

Press 'STOP' + 'LEFT' / 'RIGHT' until the indicator light is on(about 3 seconds) to lock the current channel, after locking, the current channel is the maximum number of channels of this transmitter, and the channels after the current channel will not be available.

Unlock the channel:

Under any channel, press 'STOP' + 'LEFT' / 'RIGHT' again until the indicator light is on (about 3 seconds) to release the channel lock.

Remote Control Coding Instructions

Remote Control Pairing Instructions

The remote control has been pre-paired with the product.
You only need to follow the steps below if re-pairing is required.

Pairing Instructions:

Pairing the MOTOR: After connecting the external power supply, press the button " ⊲⊳ " to adjust to "01", then press and hold the controller " MOTOR", until the light flashes and then press the" Ⓐ " about 2s , when"MOTOR" light blinks a little bit, then it finishes the code pairing.

Pairing the LED: After connecting the external power supply, press the button " ⊲⊳ " to adjust to "02", then press and hold the controller " LED", until the light flashes and then press the" Ⓐ " about 2s , when"LED" light blinks a little bit, then it finishes the code pairing.

Instructions for Controller Pairing :

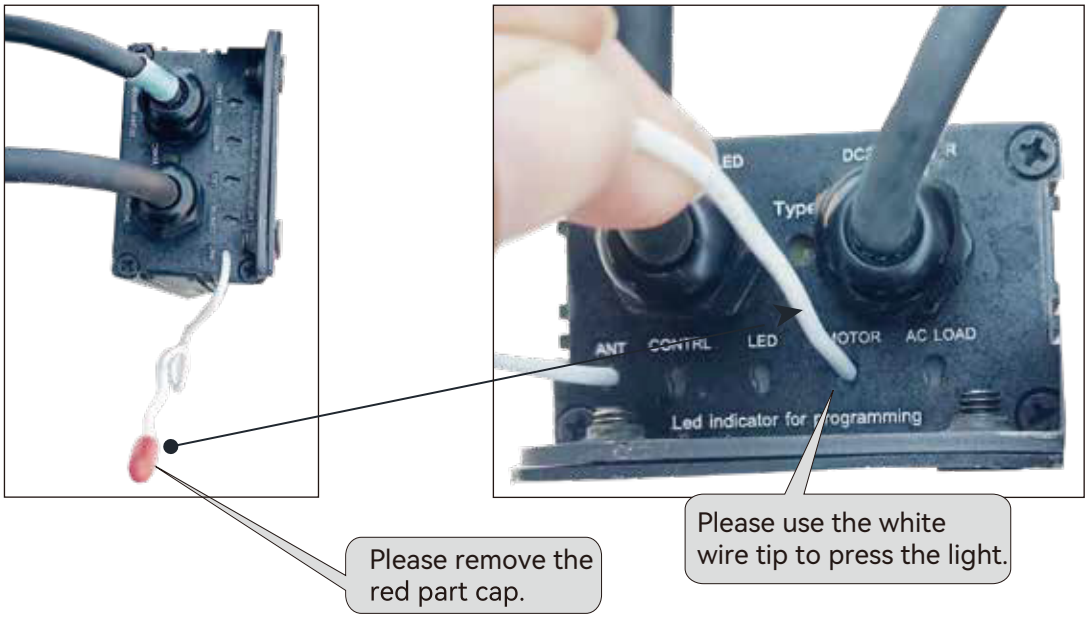

End of life and automatic monitoring:

Turn on the power supply green light on, normal output work. Press the “Test” button light to switch red, and the GFCI plug trip to stop working. Press the “Reset” button light to switch green, normal output work. When the red light flashes for the end of life, replace the GFCI plug.

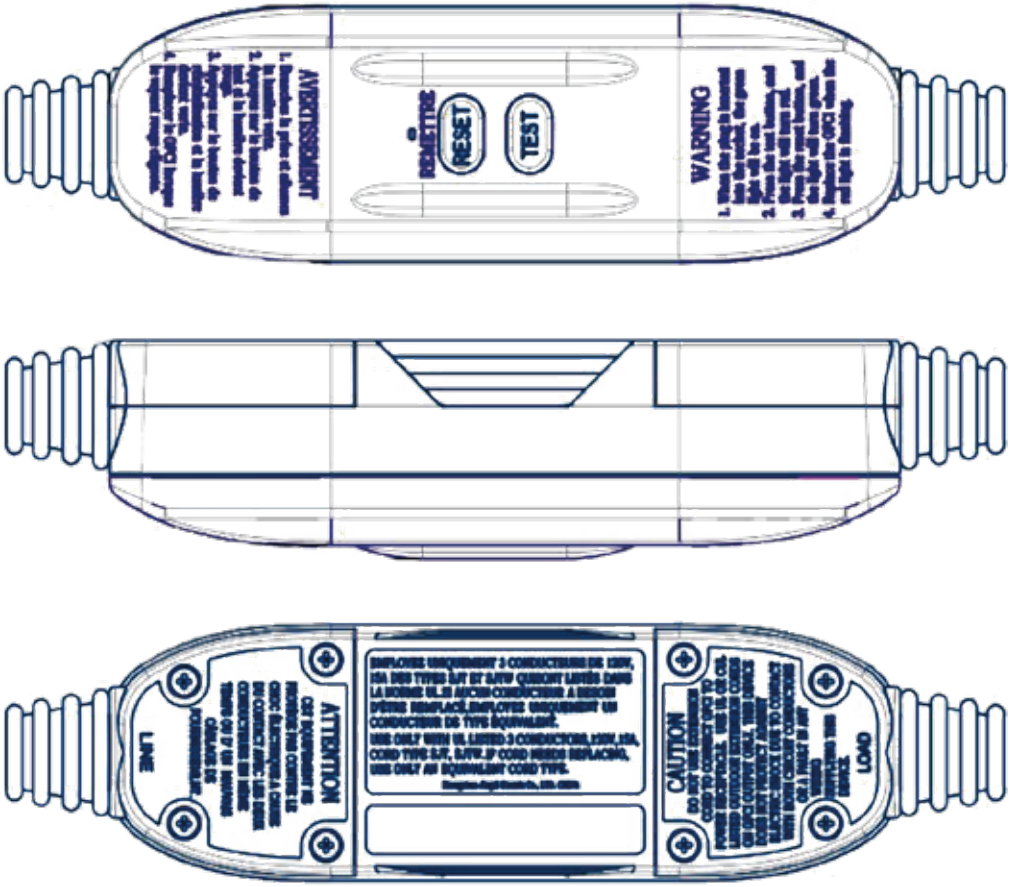

Item Maintenance & Precautions

Maintenance

Cleaning Your Pergola

• Gently wipe surfaces with a damp soft sponge/cloth and a non-abrasive, water-based household solution (e.g., diluted neutral soap)
• Avoid cleaning with a high-pressure device (e.g., Karcher), detergents (bleach, vinegar, etc.) or abrasive brushes
• Never use: Ammonia, chlorinated products (e.g., bleach), or corrosive substances—these may damage powder coatings or fabrics

Regular Cleaning of Louvres & Gutters

• Switch off power before cleaning and never touch moving louvres during operation
• Gutters: Check and clear leaves, needles, or debris at least twice a year to maintain drainage efficiency
• Louvres: Remove dry debris manually (e.g., fingers) or with a vacuum cleaner
• Wait 2 hours after rain before opening louvres to prevent water dripping. Gradual opening: Tilt to 20°, wait 20 sec → 45°, wait 20 sec → 90°, wait 20 sec

Removing Snow & Ice from Louvred Roof

Pre-winter prep:
● Conduct pre-season checks to ensure pergola is winter-ready
Snow/storm response:
● Immediately open louvres to 90° during heavy snow, hail, or winds exceeding structural limits
Snow removal steps:
● Use a wooden/plastic rake to gently pull snow to the ground
● Clear snow around the pergola to prevent meltwater pooling
Ice management:
● Never use gravel, salt, or chemicals on aluminium surfaces—allow ice to thaw naturally
● Avoid mechanical scraping to protect louvres, motors, and mechanisms

Dismounting

If you want to disassemble the Pergola, please follow the following process

Attention! At least Four people are needed for this step:

● Keep the Pergola louvers open before you begin with dismounting. Bind the Louvers of the pergola together to avoid unintended unfolding. This might cause damage and injury
● Follow the mounting instructions in reversed order to dismount the Pergola
● Make sure that drilling holes in the wall will be sealed professional
● Attention! Safety hints and instructions have to be followed for dismounting as well

Storage

When you do not want to use the Pergola for a longer period of time it is recommended to take the Pergola out of the brackets and store it.
● Make sure that the frame is dry completely before storing
● Store the Pergola at a dry and safe place that is not reachable for children

Disposal

Do not dispose this Pergola with other household wastes. To prevent possible harm to the environment or human health from uncontrolled waste disposal, recycle it responsibly to promote the sustainable reuse of material resources.

Help Center

Have questions about your product? We are always here to help.

Chat Support | Product Inquiries | Order FAQ | Product Assembly | Returns & Refunds

10 Years Warranty & Free Return Policy Within 100 Days

10 Yearrs Warranty

We offer a limited warranty on the components of the pergola. The main structural frame is covered for up to 10 years. Auxiliary components, such as the opening and closing mechanisms, are covered for up to 7 years. The warranty period begins once the product is installed and registered.

Returns and Exchanges Within 100 Days

We offer free replacements for any damaged, defective, missing, or quality-compromised parts or products upon receipt. Additionally, you can enjoy our pergola with confidence, backed by a 100-day return and exchange policy.

Return Shipping Costs

Return shipping costs will depend on the specific reason for the return.

FlexPatio covers return shipping costs in the following cases:

- Wrong items delivered
- Products with damage or defects not caused by transportation
- Missing or incorrect accessories
- Quality issues that require replacement parts

Customers are responsible for return shipping costs in the following cases:

- Returning the product due to a change of mind
- Unsatisfied after the 100-day trial period
- Canceling the order while the item is already in transit

Return Process

How to Return:

- To initiate a return, please contact us via email, phone, or message. Once we receive your request, we will confirm it and provide detailed return instructions.

Return Steps:

- Contact us to receive return instructions. (Please do not return items to the shipping address; we will provide the correct return address.)
- Fill out the return form with your order number, reason for return, and any other relevant details.
- Securely pack the item in its original packaging and keep the original labels intact
- Ship the item back using the return label we provide (if applicable).
- Once we receive and inspect the returned item, we will process your refund within 24 hours.

Reach Us At

Email: support@flexpatio.com

Phone: +1 213-456-9168

Website: www.flexpatio.com