ASSEMBLY INSTRUCTION

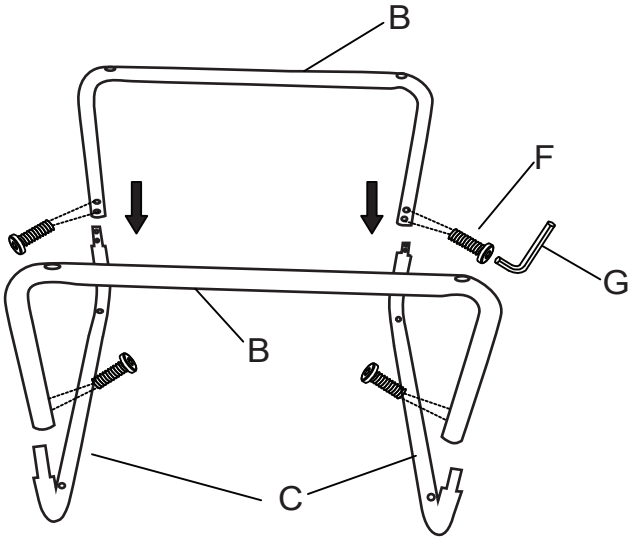

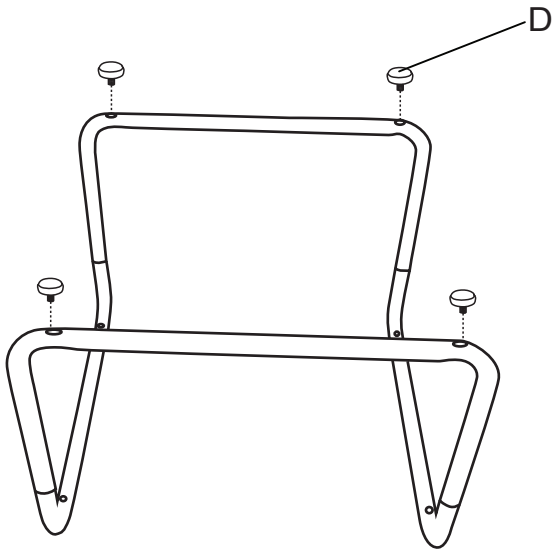

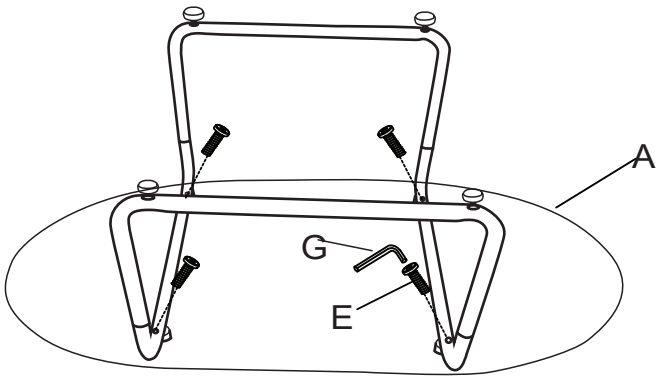

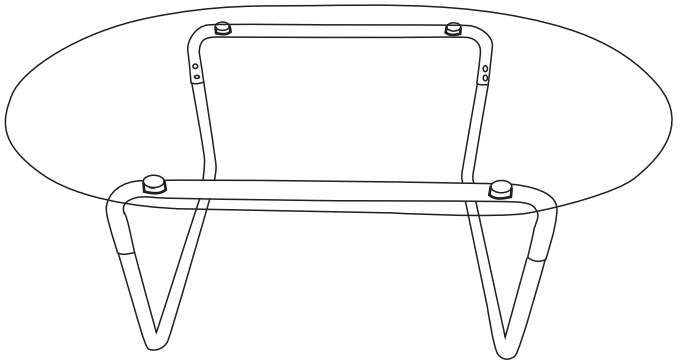

A

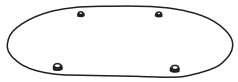

x1

B

x2

C

x2

D

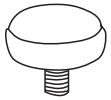

x4

E

M6x28mm

x4

F

M6x13mm

x8

G

x1